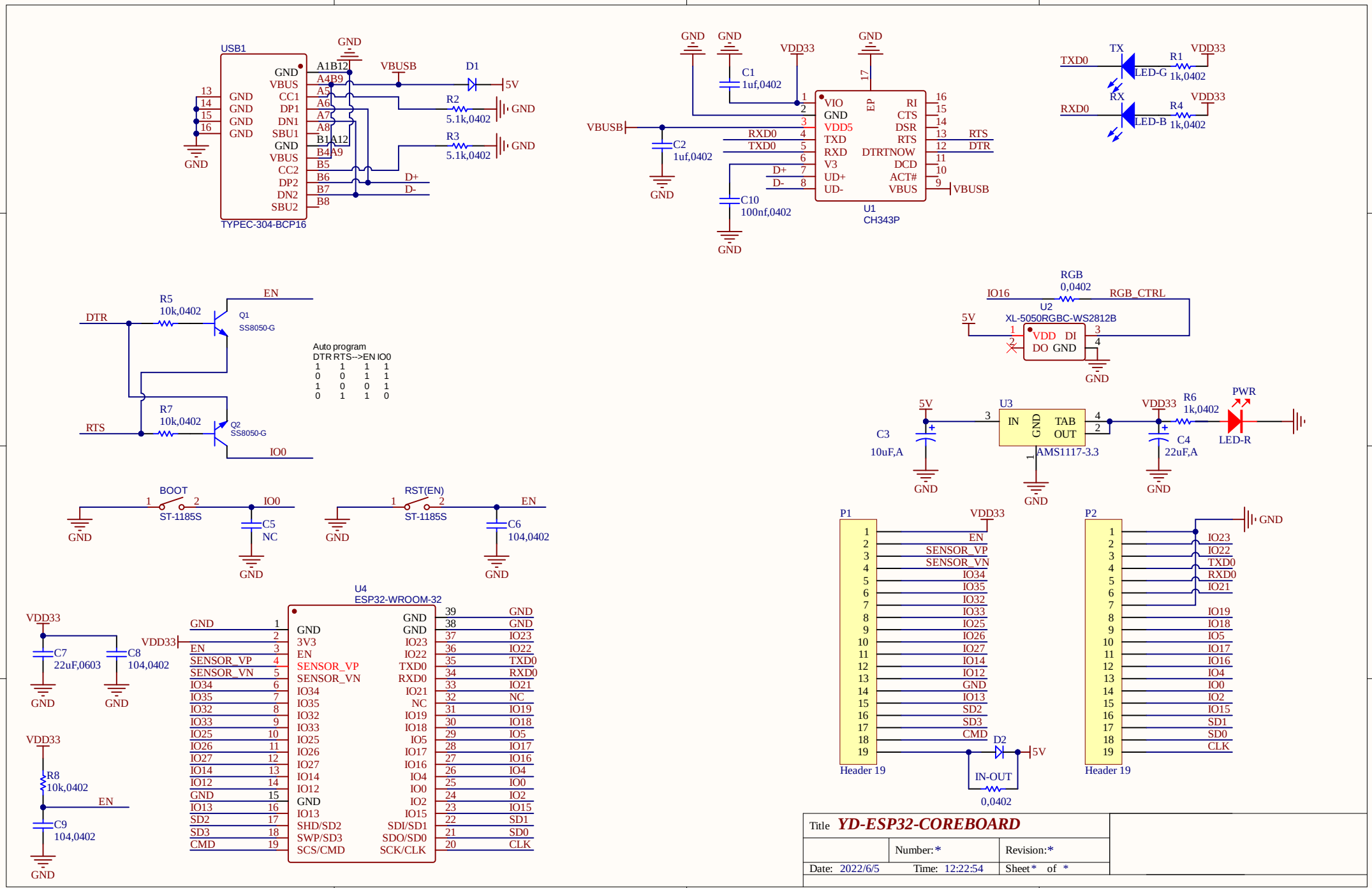
USB1
TYPEC-304-BCP16
GND
VBUS
CC1
DP1
DN1
SBU1
CC2
DP2
DN2
SBU2
A1B12
A4B9
A5
A6
A7
A8
B1A12
B4A9
B5
B6
B7
B8
VBUSB
D1
5V
R2
5.1k,0402
R3
5.1k,0402
D+
D-
C1
1uf,0402
C2
1uf,0402
C10
100nf,0402
VDD33
VIO
VDD5
TXD
RXD
V3
UD+
UD-
EP
RI
CTS
DSR
RTS
DTRTNOW
DCD
ACT#
U1
CH343P
TX
RX
TXD0
RXD0
LED-G
LED-B
R1
1k,0402
R4
1k,0402
R5
10k,0402
R7
10k,0402
Q1
SS8050-G
Q2
SS8050-G
EN
IO0
DTR
RTS
Auto program
DTR RTS-->EN IO0
1 1 1 1
0 0 1 1
1 0 0 1
0 1 1 0
RGB
0,0402
IO16
RGB_CTRL
U2
XL-5050RGBC-WS2812B
VDD
DI
DO
U3
IN
TAB
OUT
AMS1117-3.3
C3
10uF,A
C4
22uF,A
R6
1k,0402
PWR
LED-R
BOOT
ST-1185S
C5
NC
RST(EN)
ST-1185S
C6
104,0402
U4
ESP32-WROOM-32
3V3
SENSOR_VP
SENSOR_VN
IO34
IO35
IO32
IO33
IO25
IO26
IO27
IO14
IO12
IO13
SD2
SD3
CMD
IO23
IO22
TXD0
RXD0
IO21
NC
IO19
IO18
IO5
IO17
IO16
IO4
IO0
IO2
IO15
SDI/SD1
SDO/SD0
SCK/CLK
SHD/SD2
SWP/SD3
SCS/CMD
C7
22uF,0603
C8
104,0402
R8
10k,0402
C9
104,0402
P1
Header 19
D2
IN-OUT
0,0402
P2
Header 19
Title YD-ESP32-COREBOARD
Number:*
Revision:*
Date: 2022/6/5
Time: 12:22:54
Sheet* of *